Speedline America

777-4900/777-4902

Boss Front Lower Control Arms

Installation Instructions

1. Jack the car up on side and support with a jack stand.
2. Remove the wheel.
3. Remove the lower ball joint nut and bolt (7 in figure).
4. Separate the control arm from the spindle.
5. Remove outer tie rod end.
6. Slide steering rack boot out of the way.
7. Turn the steering rack to gain access to the forward mount bolt (2), and remove it.
8. Remove nuts on the rear mount of the control arm (6).
9. Remove the control arm.
10. Install in reverse procedure.

Note: If your car is a 2005-2010 model, you will need to use the drill bit provided, and follow the supplemental instructions on the next page.

Torque specs:
(6) Rear Mounting Nuts:
136 ft-lbs.

(2) Control Arm forward Mount Bolt: 155 ft-lbs.

(7) Lower Ball Joint Nut and Bolt: 76 ft-lbs.

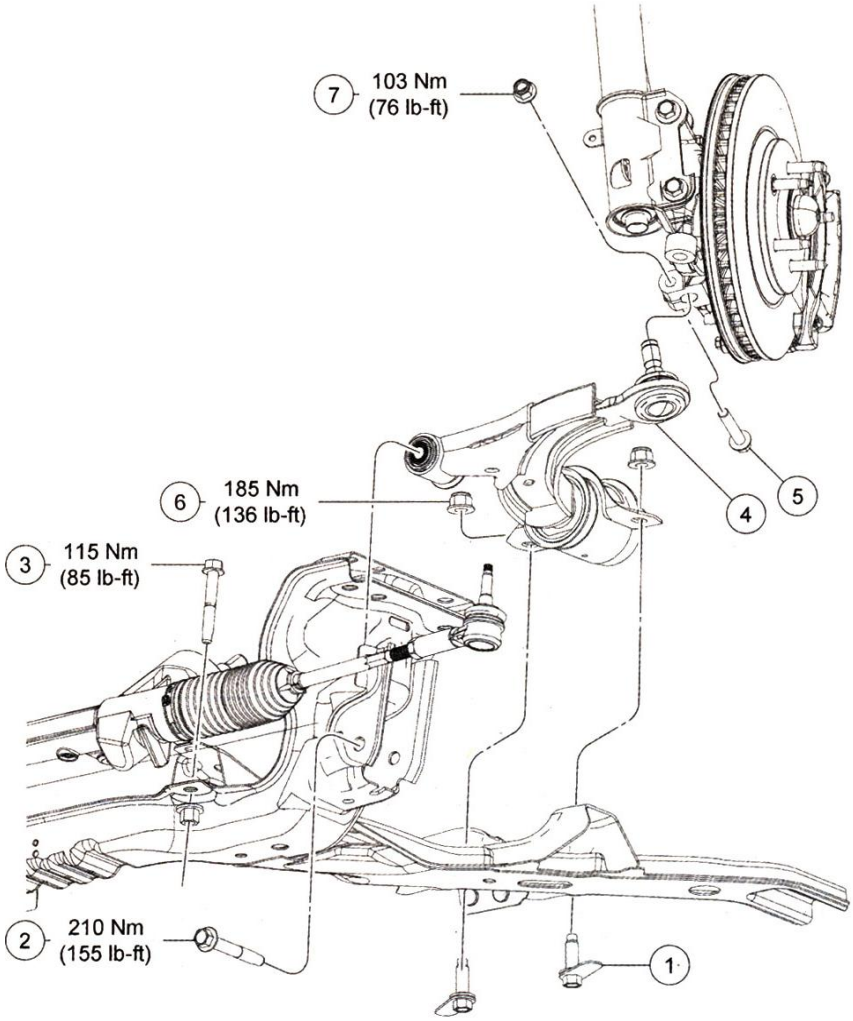

777-4902 (only applies to 2005-2010 models)

Front Lower Control Arm Special Instructions

To install these arms in a 2005-2010 Mustang you will need to modify the car's knuckle. The provided drill bit will need to be used to increase the diameter of the ball joint bore in the spindle. The increase in the ball joint bore will allow you to fit the larger/stronger ball joint installed the new control arm. Once the original control arm is removed, drill through the bottom of the spindle, as shown in the figure below. Use a file to remove any burrs that may still be in the spindle, following drilling. You now can fit the larger ball joint in the knuckle.